Prepared by: MZGD

PG&E METERED ELECTRIC SERVICE TO ANTENNA AND COMMUNICATION EQUIPMENT ON COMPANY OWNED STEEL STREETLIGHT POLES

094677

Asset Type: Electric Distribution **Function:** Design, Estimating, and Planning

Issued by: Daniel Jantz (DWJ7) **Date:** 03−25−22

Rev. #:00 This new document replaces bulletin TD-027911-B003, Rev. #04. For a description of the changes, see Page 17.

Purpose and Scope

This document illustrates the underground service requirements for specifically designed steel streetlight poles that are to be used when cellular antenna and communication equipment attachments are installed. This document also includes installation information and the required foundation for this pole.

The service and metering requirements in this document also apply to existing LS1−C streetlight poles where PG&E owns the streetlight, service, and may or may not own the pole.

References	Location	Document
Installation Details for Service to Pole−Mounted Communication Equipment	OH: Services/Greenbook	027911
Smartpole Meter for Services to Pole-Mounted Communication Equipment	OH	094675
PG&E Metered Electric Service to Antenna and Communication Equipment on Municipality Owned Steel Streetlight Poles	UG−1/OH: Services	094678
PG&E Metered Electric Service to Antenna and Communication Equipment on Non-PG&E Telecommunication Owned Poles	UG−1/OH: Services	094679

General Information

1. The streetlight pole is designed to support two communication radios, one 4G antenna, one 5G antenna, SmartPole Meter with enclosure, and a disconnect switch. Additional equipment is not allowed to be installed on the pole. See pole details in Figure 1 PG&E Steel Street Light Pole with Attachments on page 4.

2. The installation of all customer equipment and PG&E's Smart Pole metering equipment must meet all PG&E requirements and CPUC General Order 95 rules and clearances.

3. Communication equipment must have an ownership label with a contact number, site identification information, and a disconnect switch which will shut off RF transmission.

4. All materials noted as "Communication" shall be furnished and installed by the requesting communication company.

5. Inspection and approval by a qualified PG&E inspector are required.

6. If changes are made to an existing antenna installation that requires the pole to be replaced, then all requirements in this document must be met.

7. Customer equipment shall be fused or otherwise protected against short−circuit currents. A fused switch or circuit breaker, approved for service entrances, is required. Communication type fuses and fuse holders are not satisfactory means of disconnecting the power source.

Electric Service

8. Install a 2−wire (1−hot, 1−neutral) 1−phase 120 volt service (Duplex, 600 V insulated) or a 2−wire (1−hot, 1−neutral) 1−phase 240 volt service along with a #6 bare Cu ground wire to the street light pole with the SmartPole meter.

9. A 3−wire 1−phase 120/240 volt service (triplex) is allowed with SmartPole metering if requested for the antenna and communication equipment.

10. Customer service loads in this type of application must be less than 68 amps. Loads exceeding this limit cannot be served on the pole.

Disconnect Switch

11. Refer to Document 094675 for installation requirements.

12. A lockable disconnect switch must be installed that will de−energize all customer equipment (ac and dc) on the pole, including antennas, power supplies, radios, and any types of backup power sources.

13. The disconnect switch must not de−energize (turn off) the streetlight(s) or the PG&E Smart Meter.

14. The disconnect switch must be readily accessible at all times. The switch will be used as part of the normal or emergency shutdown protocols required in California Public Utility Commission (CPUC) General Order 95, Rule 94.

15. The disconnect switch is required regardless if the antenna meets or exceeds the FCC's General Population (G.P.) Uncontrolled Limits.

16. Signage must be attached to the switch identifying what equipment it will de−energize.

17. The switch must not de−energize (turn off) the PG&E Smart Meter. See the Single Line Drawing in Figure 2 on Page 8.

18. If using an individual disconnect switch it must be attached externally on the pole less than 10 feet above grade and more than 4 feet above grade, as measured to the bottom of the switch enclosure.

Signage

19. Antennas and communication equipment installed on PG&E poles must have an ownership label with a contact number, site identification information. Poles shall be marked for each equipment installation. The sign shall contain the following information and placement.

    A Name / identification of the antenna operator

    B A 24-hour contact number of antenna operator for emergency notification or other information

    C Unique identifier of the antenna installation

    D Indication that the antennas RF output is in compliance with the FCC General Population (G.P.) uncontrolled exposure limits or, if the antenna exceeds those limits indication of the minimum approach distance. See Utility Procedure TD-2001P-01 Procedures for Working Around Antennas for examples of typical RF signage.

    E Located above the SmartPole Meter and not greater than 15 feet above grade.

SmartPole Metering

20. A PG&E SmartPole Meter and enclosure are required for these installations. Refer to Document 094675 listed in the reference documents on Page 1 for the SmartPole metering options and specific requirements.

    The metering provision contained herein is an exception to the Greenbook requirement and is designed primarily for communication equipment requiring metering. The SmartPole meter must be mounted on the same pole as the PG&E service, antenna, and communication equipment. **Remote metering is not allowed**.

21. PG&E Meters must not be installed on poles that are in traffic medians or traffic islands where vehicle thoroughfares are on more than one side of the pole. A different pole must be selected for the meter, service, antenna, and communication equipment.

22. Do **not** install the SmartPole Meter in the shroud at the top of the pole for new or upgraded installations. The meter and enclosure must be installed on the pole at a minimum of 7 feet to a maximum of 8 feet above grade, as measured from the bottom of the enclosure, and not exposed to vehicular traffic. Refer to Document 094675 .

23. Clear and level working space that is 30 inches wide by 36 inches deep by10 feet high is required in front of the meter. The working space must clear of all obstacles and not be located on slopes, ramps, or driveways.

24. The streetlight bracket (arm) must not be covered by a shroud or other antenna cover. There must be a minimum of 3” of clearance for compliance inspections of the pole.

25. Document 027911 Clearance from street signs and signs on poles

26. Document 027911 Wood poll distance from street light pole must be greater than 10 feet?

27. Antennas and communication equipment on the pole must not block or impede the illumination projecting (throw) from the streetlight fixture (luminaire). For specific requirements see document TD-092817-B002 Streetlighting Design Restrictions: Mounting Apparatus below Streetlights.

Streetlight Pole Foundation

28. The foundation must be poured in place. Concrete shall be poured directly against the soil. If casing is used, remove the casing as concrete is placed.

29. Concrete shall have a minimum compressive strength of 4000 pounds per square inch in 28 days.

30. Verify all dimensions and any existing elements in the field prior to starting work.

31. Pipes and sleeves shall not pass through structural members except as shown in Figure 9.

32. Steel items other than reinforcing steel bars shall be hot−dipped galvanized in accordance with ASTM A153.

33. Headed reinforcing steel bars, per HRC 555 or equivalent, shall be used.

34. Use non−shrink grout that meets ASTM C1107 requirements. Grout shall have a minimum compressive strength of 5000 pounds per square inch when mixed to the flowable condition.

PG&E Metered Electric Service to Antenna and Communication Equipment on Company Owned Steel Streetlight Poles

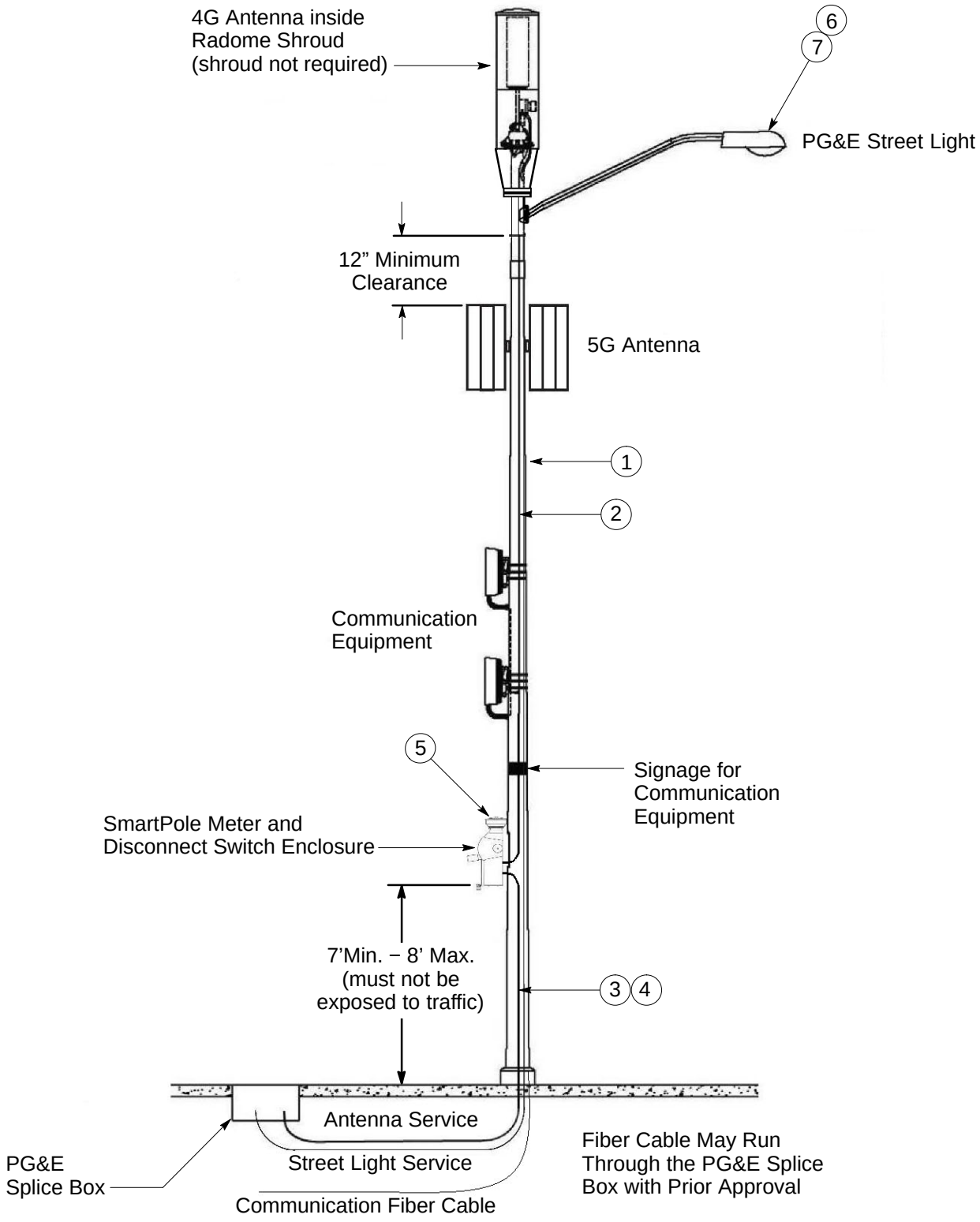

Figure 1
PG&E Steel Streetlight Pole with 4G and 5G Antennas and Communication Equipment − Underground Service Only

Table 1 Bill of Material to be Furnished and Installed by PG&E[1]

Item	Description	Code
1	Street Light Pole with Antenna Provisions	See Tables 3A & 3B (in this document)
2	#6 Al Duplex−UG (XLP) Service, Street Light only	M294347
3	#6 Al Duplex−UG (XLP) Service, Communications and Antenna Equipment only	M294347
4	Triplex−UG (XLP) Service (if needed), Communications and Antenna Equipment only	As Required
5	SmartPole Meter	As Required
6	Photo Cell	As Required
7	Luminaire	As Required

[1] Includes contractors or applicant installers hired by PG&E.

Table 2 Bill of Material to be Furnished and Installed by Communication Company

Description	
Breaker Box/Load Center	Required
#12 Cu 600V (Hot, Neutral, Ground)	As Needed
#2 Cu 600 V Ground	As Needed
Micro Maxcell Innerduct or Equivalent	Required
Radios or Relay Units	As Needed
Fiberglass Shroud	As Needed
Diplexers	As Needed
Terminal Block/Splice Connection	As Needed
Hoist Grip for cable support	As Needed
RF Sign (Above SmartPole Meter, Maximum 15 feet above grade)	Required
0.5” Coaxial Cables	As Needed
Shutoff Sign	Required
Ground Rod	Required
Antenna	As Needed
Fiber from communication network	As Needed

Table 3 PG&E Material Codes for Streetlight Poles with Antenna Provisions

Material Code	Style / Post Height	Arm Length	Description
M150392	Steel / 26 Ft.− 6 In.	4 foot	Antenna streetlight pole, Steel, 26.5 foot, 4 foot arm, Smooth, Galvanized
M150393	Steel / 26 Ft.− 6 In.	6 foot	Antenna streetlight pole, Steel, 26.5 foot, 6 foot arm, Smooth, Galvanized
M150395	Steel / 26 Ft.− 6 In.	8 foot	Antenna streetlight pole, Steel, 26.5 foot, 8 foot arm, Smooth, Galvanized
M150396	Steel / 31 Feet	6 foot	Antenna streetlight pole, Steel, 31 foot, 6 foot arm, Smooth, Galvanized
M150399	Steel / 31 Feet	8 foot	Antenna streetlight pole, Steel, 31 foot, 8 foot arm, Smooth, Galvanized

Note: The base plate on these poles may be redesigned in the future and any stocked poles could become obsolete, therefore it is suggested a minimal quantity of poles should be stocked.

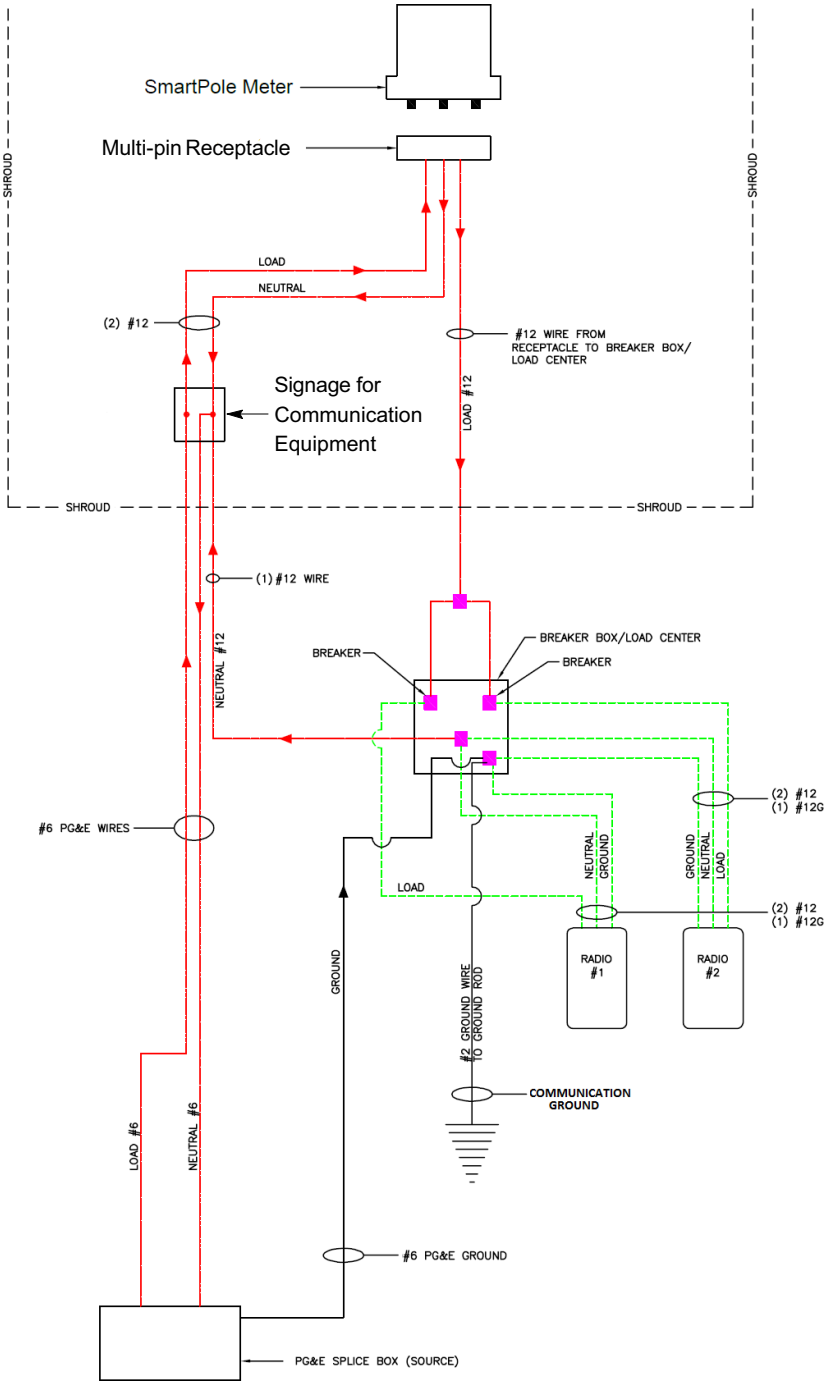

Figure 2
(by Communications Company unless note as by PG&E)

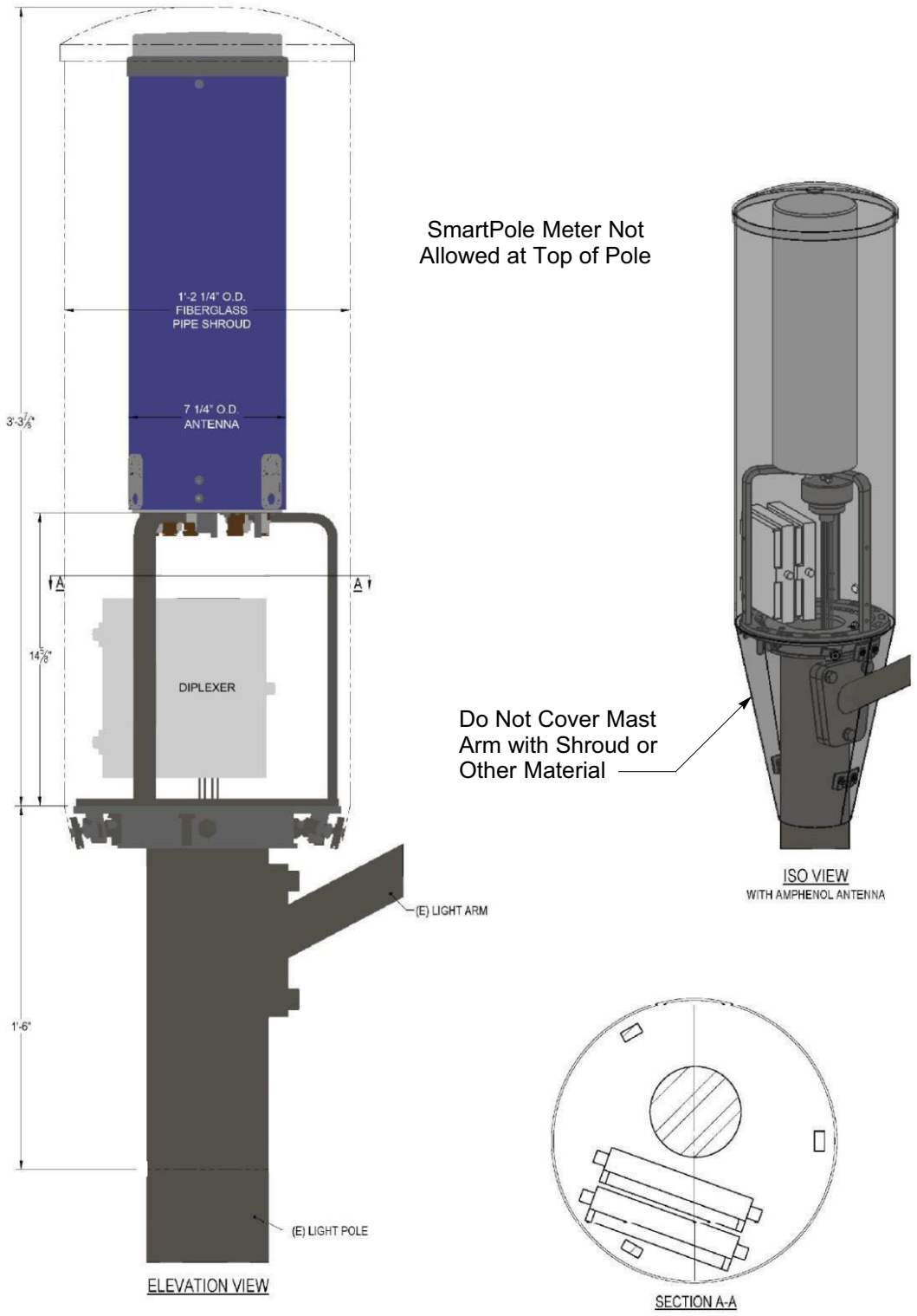

Figure 3
Pole Top Antenna Detail

NON EMERGENCY NODE SITE POWER SHUT DOWN PROCEDURES

1. FOR NON EMERGENCY/SCHEDULED POWER SHUT DOWN
   - CALL <INSERT NAME OF COMMUNICATION COMPANY AND PROVIDE PHONE NUMBER>
   - 24 HRS PRIOR TO SCHEDULED POWER SHUT OFF PROVIDE THE FOLLOWING INFORMATION:
     - SITE NUMBER IDENTIFIED ON SITE NUMBERING STICKER
     - YOUR NAME AND REASON FOR POWER SHUTOFF
     - PROVIDE DURATION OF OUTAGE
   - PULL DISCONNECT HANDLE TO "OFF" POSITION
   - POWER SHUT OFF VERIFICATION WITH APPROVED PG&E PROCEDURES
   - NOTIFY <INSERT NAME OF COMMUNICATION COMPANY> UPON COMPLETION OF WORK
   - RESTORE POWER BY PLACING POWER DISCONNECT HANDLE IN THE "ON" POSITION
   - REINSTALL LOCK ON POWER HANDLE

2. EMERGENCY POWER SHUT OFF
   - CALL <INSERT NAME OF COMMUNICATION COMPANY AND PROVIDE PHONE NUMBER>
   - PROVIDE THE FOLLOWING INFORMATION:
     - SITE NUMBER IDENTIFIED ON SITE NUMBERING STICKER
     - YOUR NAME AND REASON FOR POWER SHUTOFF
     - PROVIDE DURATION OF OUTAGE
   - PULL DISCONNECT HANDLE TO "OFF" POSITION
   - POWER SHUT OFF VERIFICATION WITH APPROVED PG&E PROCEDURES
   - NOTIFY <INSERT NAME OF COMMUNICATION COMPANY> UPON COMPLETION OF WORK
   - RESTORE POWER BY PLACING POWER DISCONNECT HANDLE IN THE "ON" POSITION
   - REINSTALL LOCK ON POWER HANDLE

Figure 4
Shut Down Procedure Sign

ILSCO PBTD-2-1/0 MULTI TAP
TWO SIDED TERMINAL CONNECTOR
(FOR CONDUCTOR SIZES 14-1/0 AWG)

Figure 5

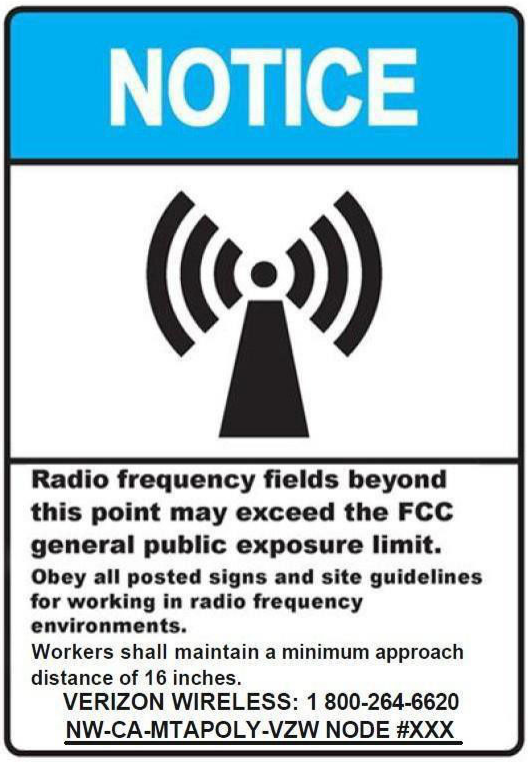

Figure 6 Sample RF Sign

Figure 7 Micro Maxcell Innerduct Inside Pole Section Without Cables

NOTE: All streetlight, power, and communication cables are to be isolated using Micro Maxcell Innerduct throughout the pole.

Street Light Pole Details

– – GENERAL NOTES – –	
MATERIAL SPECIFICATIONS	
SHAFT	STEEL OF 48 KSI YIELD AFTER FORMING
BASE & MISC PLATES	ASTM A36
PIPE	ASTM A53 GR B or A500 GR B
ANCHOR BOLTS	ASTM F155 GR 55
	MANUFACTURING PROCESSES
BUTT WELDS	GROUND FLUSH WITH BASE METAL
LONGITUDINAL WELDS	BUTT WELDED BY THE ELECTRICAL RESISTANCE PROCESS
	FINISH COATING
STRUCTURE	HOT DIP GALVANIZE PER ASTM A153
HARDWARE	HOT DIP GALVANIZE PER ASTM A153
	DESIGN CRITERIA
STRUCTURE AND HARDWARE	DESIGNED IN ACCORDANCE WITH 2001 AASHTO "STANDARD SPECIFICATIONS FOR STRUCTURAL SUPPORTS OF HIGHWAY SIGNS, LUMINARIES AND TRAFFIC SIGNALS"
WELDING	IN ACCORDANCE WITH THE LATEST EDITION OF THE AWS D1.1 SPECIFICATION

Table 4 Pole Data

– – GENERAL NOTES – –														
PG&E MATERIAL CODE	POLE DESCRIPTION	SHAFT DIMENSIONS				BASE PLATE DATA				ANCHOR BOLTS			ARM LENGTH "E"	NOMINAL MTG HEIGHT
		LENGTH "A"	BASE O.D.	TOP O.D.	WALL THK	BASE SQUARE "F"	BOLT CIRCLE "BC1"	BOLT CIRCLE "BC2"	BASE THK "T"	DIA	LENGTH	SETTING BOLT CIRCLE		
150392	PL–ANT–264	26'–6"	7 7/8"	4 1/4"	0.1196"	11 1/2"	11 1/2"	11"	1"	1"	36"	11"	4'–0"	27'–6"
150393	PL–ANT–266	26'–6"	7 7/8"	4 1/4"	0.1196"	11 1/2"	11 1/2"	11"	1"	1"	36"	11"	6'–0"	28'–0"
150395	PL–ANT–268	26'–6"	7 7/8"	4 1/4"	0.1196"	11 1/2"	11 1/2"	11"	1"	1"	36"	11"	8'–0"	28'–0"
150396	PL–ANT–316	31'–0"	8 1/2"	4 1/4"	0.1196"	11 1/2"	11 1/2"	11"	1"	1"	36"	11"	6'–0"	32'–6"
150399	PL–ANT–318	31'–0"	8 1/2"	4 1/4"	0.1196"	11 1/2"	11 1/2"	11"	1"	1"	36"	11"	8'–0"	32'–6"

Table 5 Arm Data

– – LUMINAIRE ARM DATA – –					
ARM LENGTH "E"	ARM TUBE DIMENSIONS			RISE	θ
	BASE O.D.	END O.D.	WALL THK		
4'–0"	3"	2 3/8"	0.1196"	1'–6"	28"
6'–0"	3 5/16"	2 3/8"	0.1196"	2'–0"	28"
8'–0"	3 11/16"	2 3/8"	0.1196"	2'–0"	20"

ORDERING NOMENCLATURE

LUMINAIRE ARM LENGTH

PL–ANT–268

POLE TYPE

SHAFT LENGTH

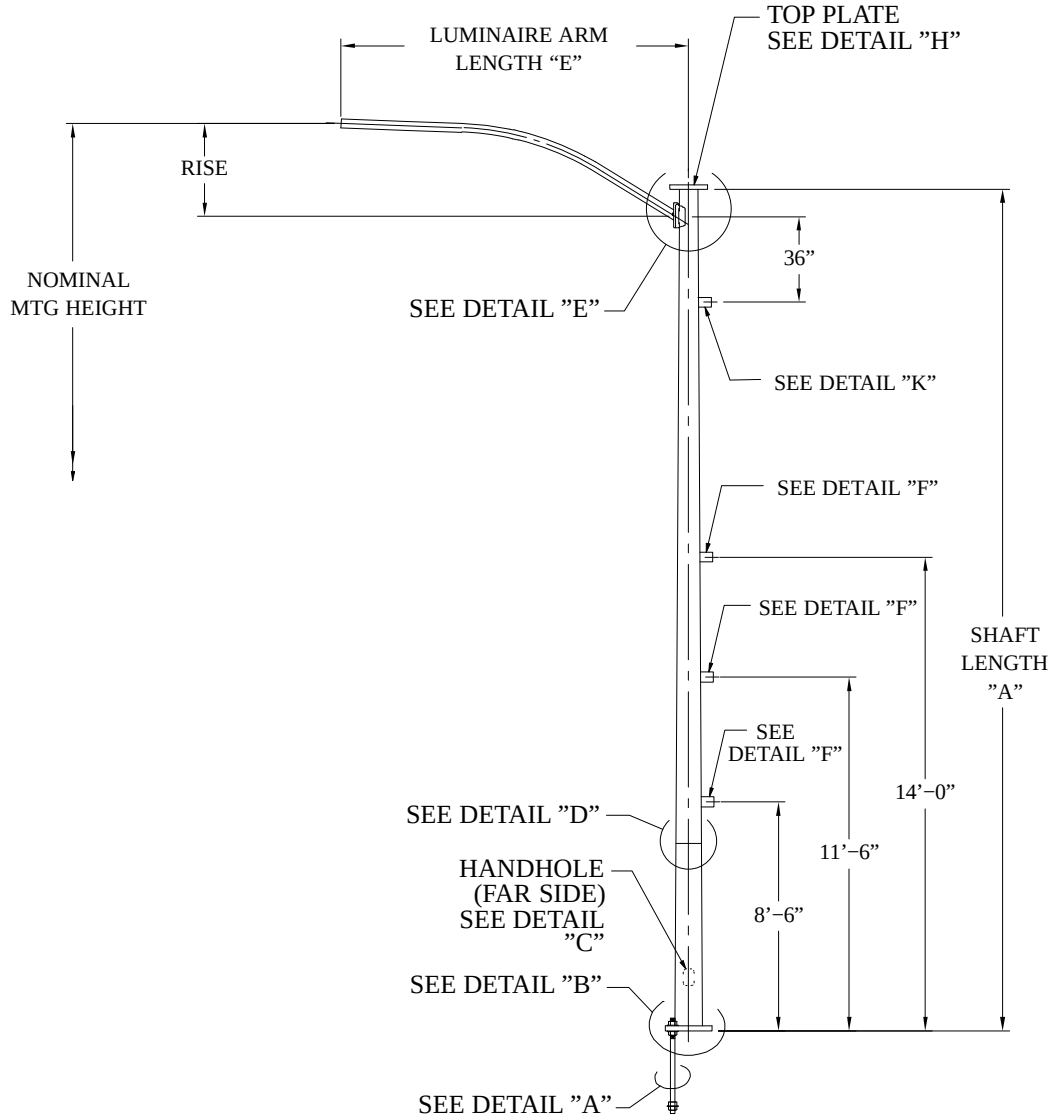

Figure 8
Street Light Pole with Antenna Provisions – Elevation

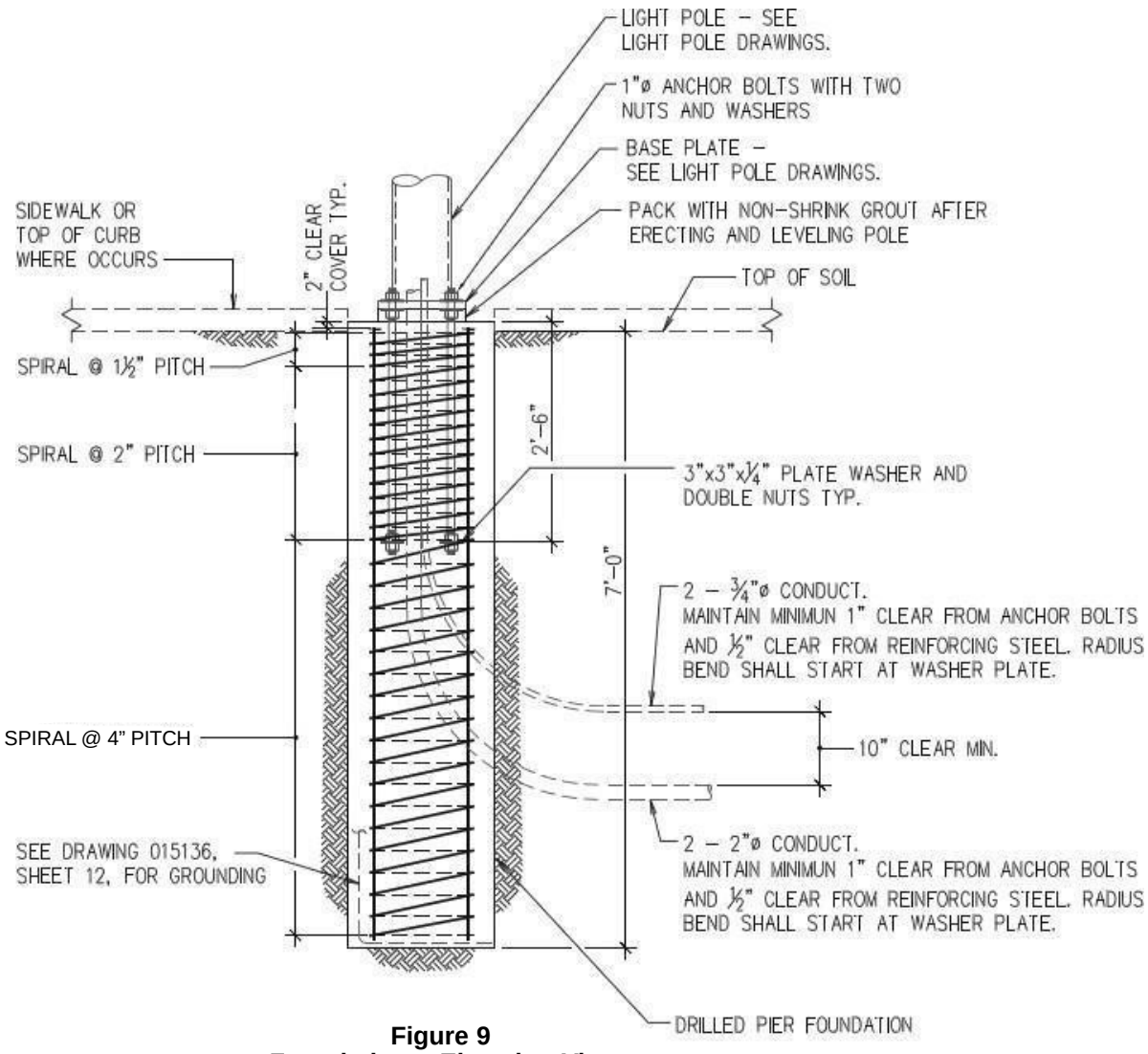

Figure 9
Foundation − Elevation View

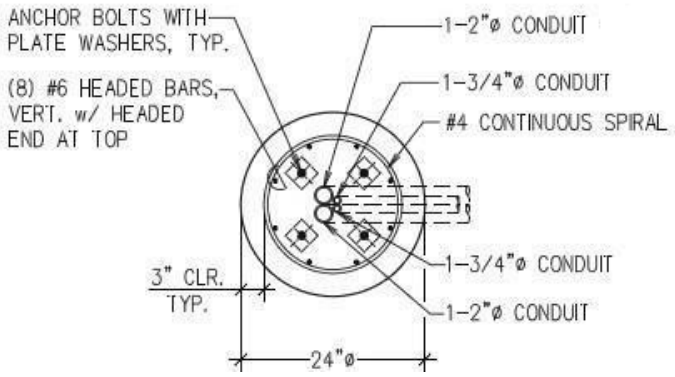

Figure 10
Foundation − Plan View

PG&E Metered Electric Service to Antenna and Communication Equipment on Company Owned Steel Streetlight Poles

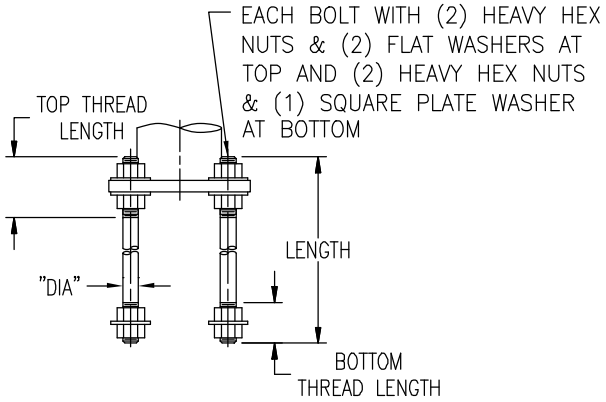

ANCHOR BOLTS (THREADED 16" AT TOP END & 3" AT BOTTOM END & GALVANIZED FULL LENGTH). FOR LENGTH AND DIAMETERS SEE "ANCHOR BOLT" COLUMN IN POLE DATA TABLE. (TYPICAL–4 REQUIRED)

DETAIL "A" ANCHOR BOLT DETAIL

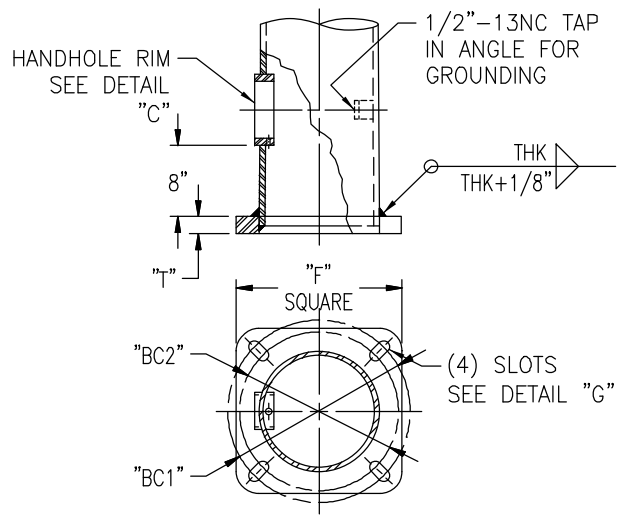

DETAIL "B" BASE PLATE DETAIL

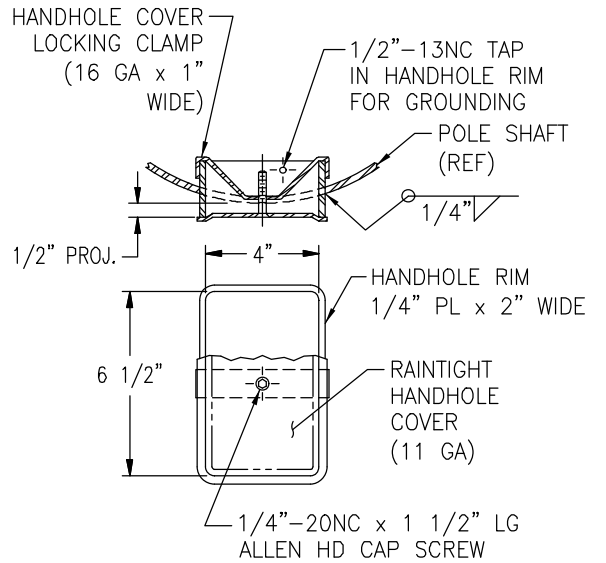

DETAIL "C" HANDHOLE DETAIL

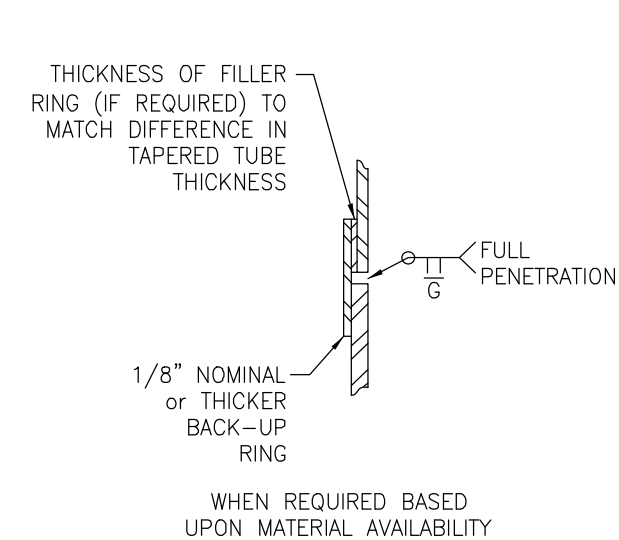

WHEN REQUIRED BASED UPON MATERIAL AVAILABILITY

DETAIL "D" SPLICE DETAIL

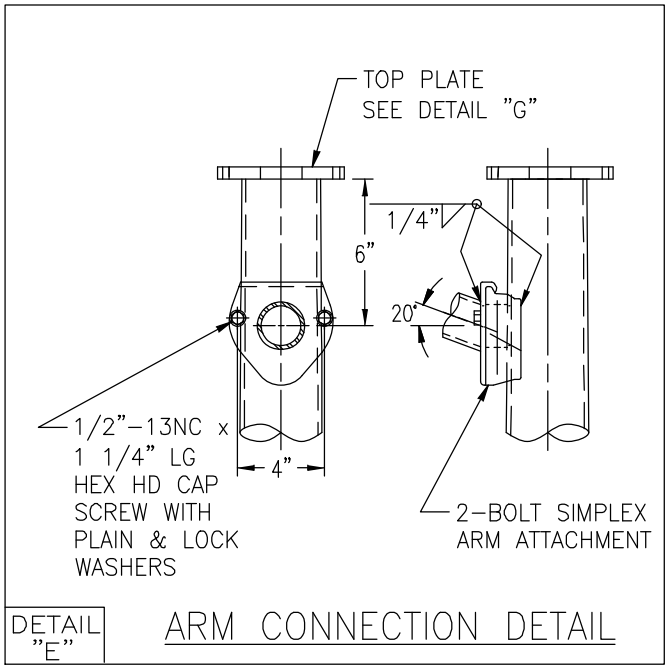
TOP PLATE
SEE DETAIL "G"
1/4"
6"
20°
1/2"–13NC x
1 1/4" LG
HEX HD CAP
SCREW WITH
PLAIN & LOCK
WASHERS
4"
2–BOLT SIMPLEX
ARM ATTACHMENT
DETAIL "E"
ARM CONNECTION DETAIL

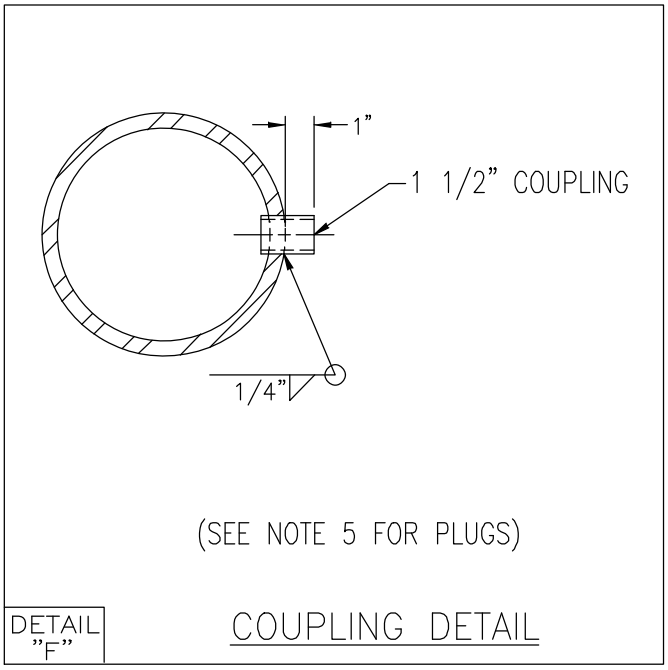
1"
1 1/2" COUPLING
1/4"
(SEE NOTE 5 FOR PLUGS)
DETAIL "F"
COUPLING DETAIL

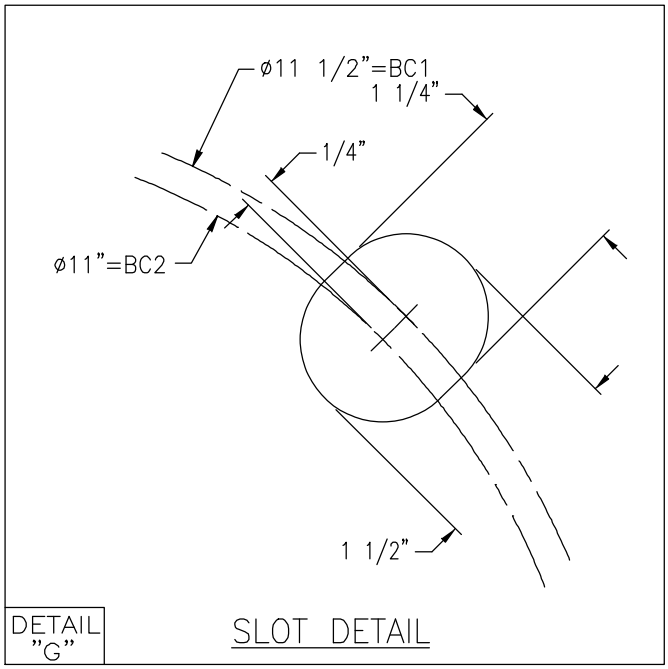
ø11 1/2"=BC1
1 1/4"
1/4"
ø11"=BC2
1 1/2"
DETAIL "G"
SLOT DETAIL

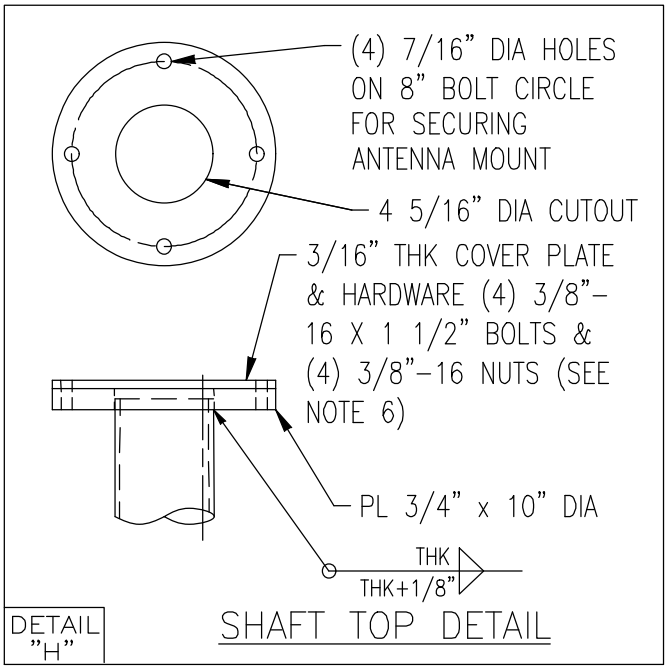
(4) 7/16" DIA HOLES
ON 8" BOLT CIRCLE
FOR SECURING
ANTENNA MOUNT
4 5/16" DIA CUTOUT
3/16" THK COVER PLATE
& HARDWARE (4) 3/8"–
16 X 1 1/2" BOLTS &
(4) 3/8"–16 NUTS (SEE
NOTE 6)
PL 3/4" x 10" DIA
THK
THK+1/8"
DETAIL "H"
SHAFT TOP DETAIL

PG&E Metered Electric Service to Antenna and Communication Equipment on Company Owned Steel Streetlight Poles

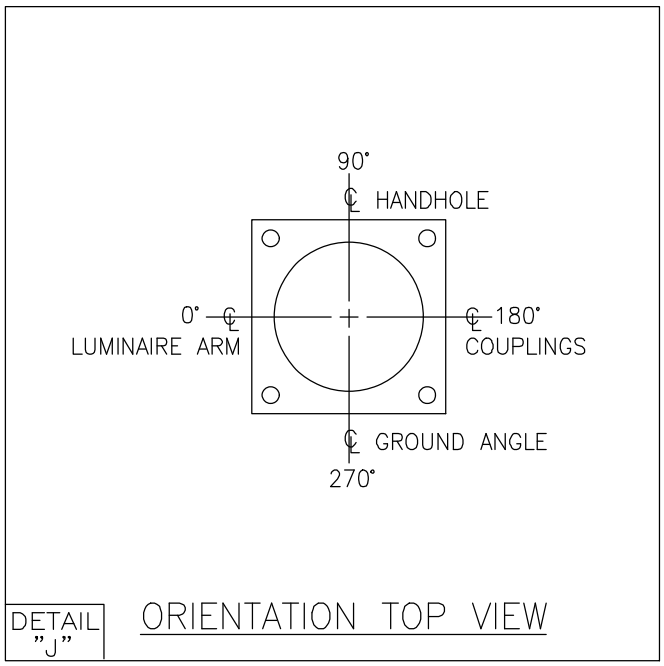

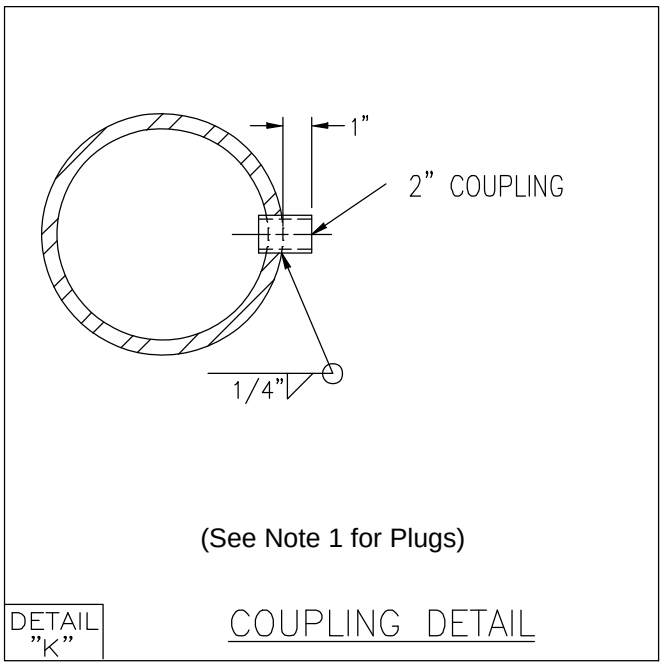

1 AMERON TO SUPPLY (1) 2" AND (2) 1 1/2" PLUGS TO BE INCLUDED WITH EACH POLE.

2 AMERON TO SUPPLY COVER PLATE & HARDWARE (A307 GALV) FOR TOP OF POLE.

Revision Notes

Revision 00 has the following changes:

1. Converted Bulletin TD−027911−B003 to this new numbered engineering document.
2. Updated requirements throughout.
3. Updated Figure 1 on Page 4.
4. Updated Figure 3 on Page 8.